ZONE	REV	DESCRIPTION	DATE
	D	WAS 72 1/2	03DEC04

REVISIONS

ZONE	REV	DESCRIPTION	DATE	APPROVED
	C	REDRAWN	10FEB97	
	C1	CORRECTED, WAS 27-1/2	23SEP02	

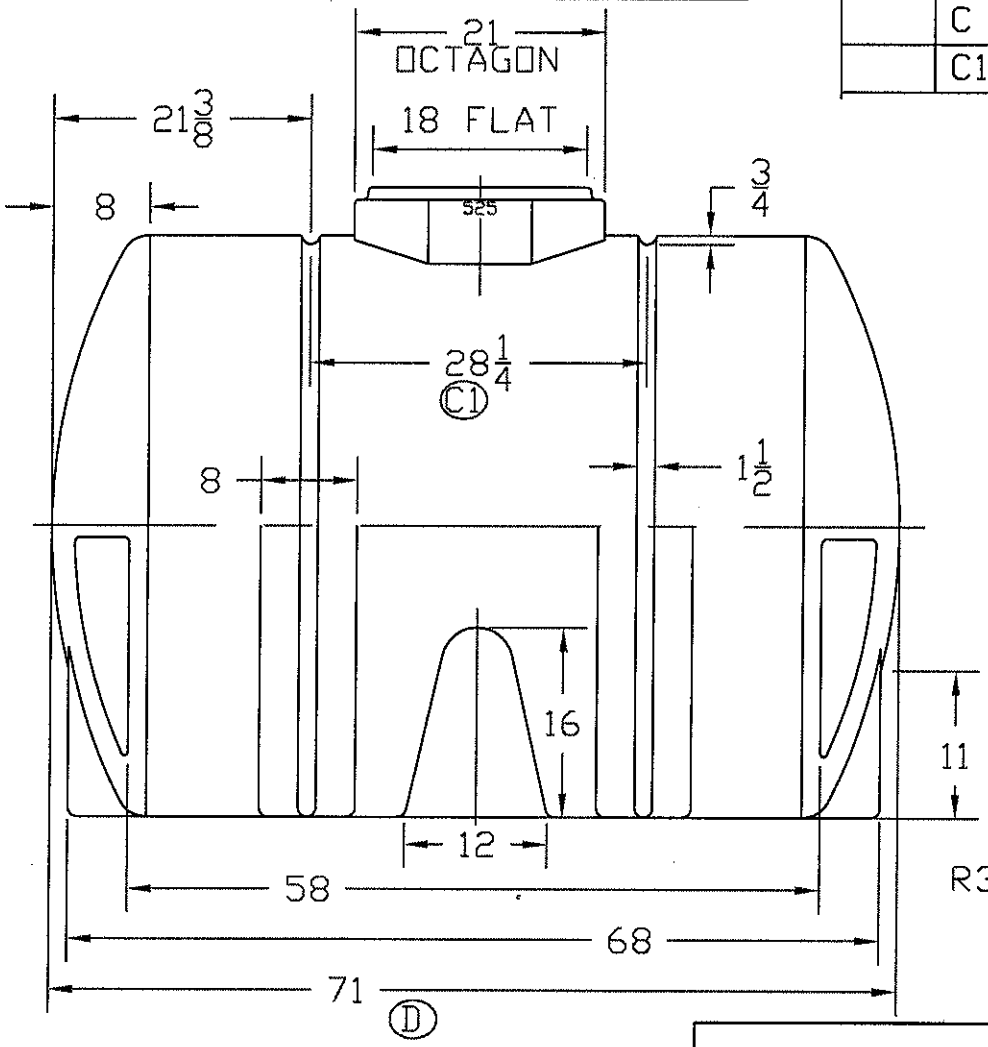

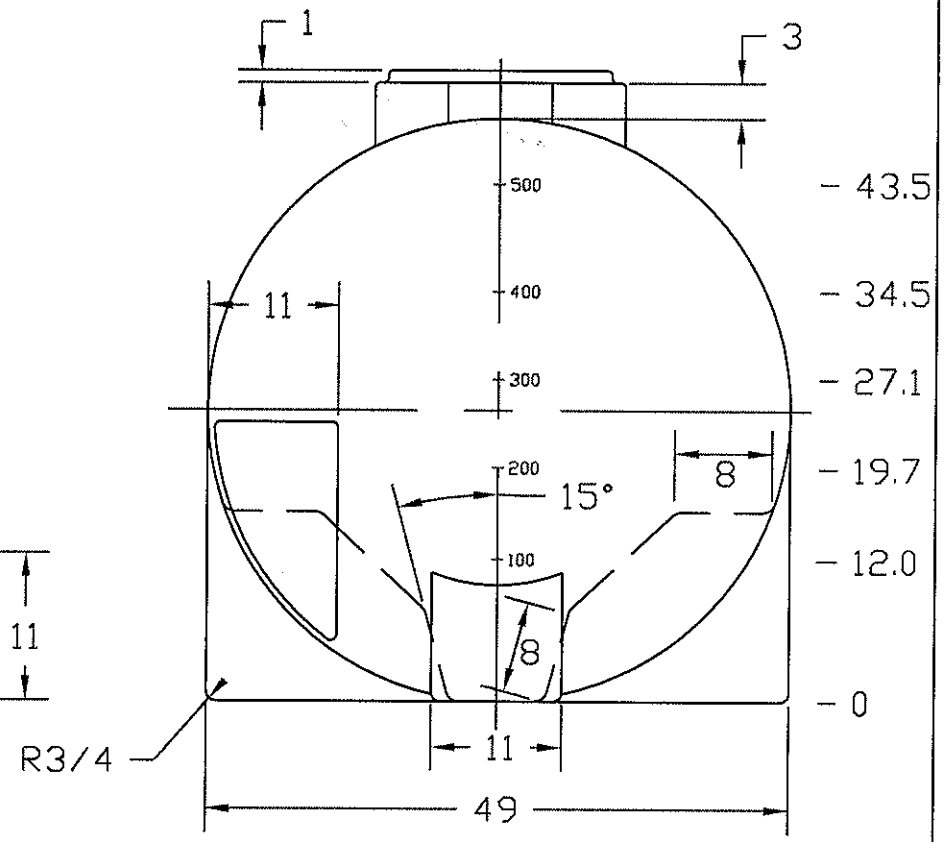

NOTE: GALLONAGE MARKS BOTH ENDS

NORWESCO
ST. BONIFACIUS, MN

525 GAL HORIZONTAL TANK

JTP 10FEB97

SIZE	FSCM NO.	DWG NO.	REV
A			D

SCALE 1/16 SHEET