REVISIONS				
ZONE	REV	DESCRIPTION	DATE	APPROVED
	B	REDRAWN	10JAN97	

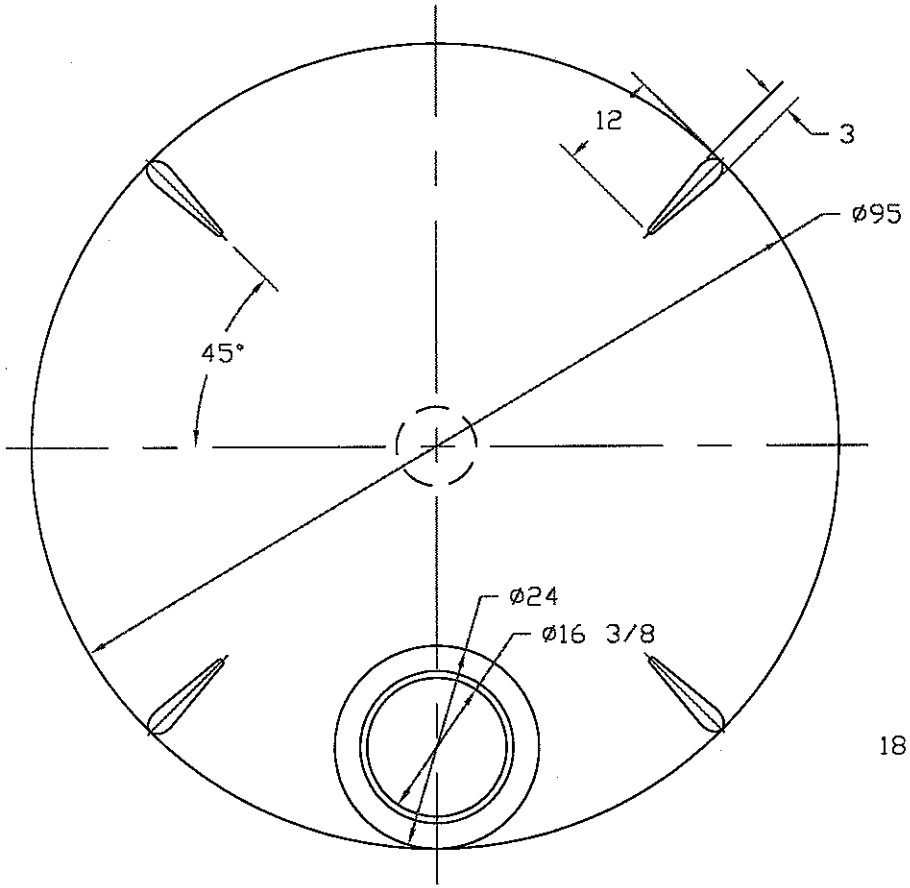

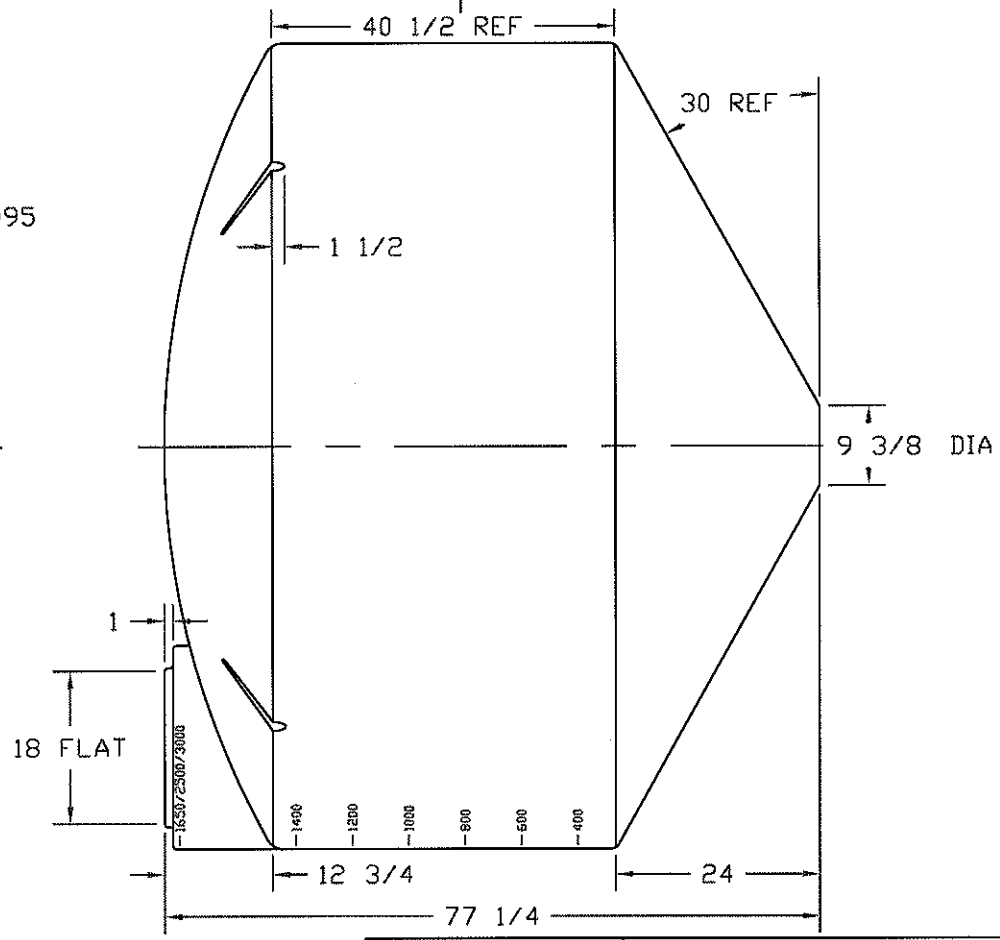

NORWESCO
ST. BONIFACIUS, MN

1650 GALLON CONE BOTTOM TANK

JTP 10JAN97	SIZE B	FSCM NO.	DWG NO.	REV B
	SCALE 1/16		SHEET	